Technical Data Sheet

ODP-AGM27



- Group 27 Absorbed Glass Mat (AGM) battery with Thin Plate Pure Lead (TPPL)
- Massive starting power, rapid recovery, and amazing deep cycling capability
- Advanced dual purpose battery for engine start and deep cycle use

Handling and Storage

- Can be mounted or stored in any orientation except inverted
- 2-years storage life at 77°F (25°C) without needing to charge. Recharge when the OCV is <12.2V (50% SOC).
- Classified as non-spillable and approved as non-hazardous cargo for ground, sea and air transportation in accordance with the requirements of IMDG (International Maritime code for Dangerous Goods) and ICAO (International Civil Aviation Organisation)

Charging and Self-Discharge

Cyclic Charge Voltage	14.4 - 14.8V @ 25ºC
Float Charge Voltage	13.5 - 13.8V @ 25ºC
Charger voltage at 68°F (20°C)	14.4V to 14.8V
Self-discharge per month at 68°F (20°C)	1.25%
Self-discharge per month at 104°F (40°C)	5%
80% depth of discharge cycles	400

Accreditations

The management systems governing the manufacture of this product are ISO 9001 and ISO 14001 certified.

*Cold Start Performance S.A.E J537 Apr 2016

Power and Performance

Voltage	12V
Pulse (5 second) Hot Cranking Amps (PHCA)	1500A
Cold Cranking Amps (CCA)	850A
HCA	1150A
MCA	975A
20Hr Nominal Capacity (Ah)	85Ah
10Hr Nominal Capacity (Ah)	79Ah
Reserve Capacity Minutes	182 mins
Terminal	SAE
Torque Spec in-lbs (Nm max)	N/A
Internal Resistance (mΩ)	3.8 mΩ
Short Circuit (A)	2400A
Recommended Min. Charging Current (A)	7.9A
UPC	635241140545

Dimensions and Weight

Length	12.5 in / 318 mm
Width	6.8 in / 173 mm
Height (terminals included)	8.8 in / 224 mm
Height (container)	8.2 in / 208 mm
Weight	59.7 lbs / 27.1 kg

See Line Drawing on next page

Temperature

Operating temperature range	-40°F / -40°C to 140°F / +60°C
Optimum storage temperature	68°F / +20°C

Technical Data Sheet correct at time of exporting PDF. Please check website for updates.

EnerSys World Headquarters
2366 Bernville Road
Reading, PA 19605, USA
Tel: +1-800-964-2837

EnerSys EMEA
EH Europe GmbH
Baarerstrasse 18
6300 Zug, Switzerland

EnerSys APAC
No. 85, Tuas Avenue 1
Singapore 639518
Tel: +65 6558 7333

Want more info? Scan code to access the ODYSSEY® Battery Literature Library

© 2026 EnerSys. All rights reserved. Trademarks and logos are the property of EnerSys and its affiliates unless otherwise noted. Subject to revisions without prior notice. E.&O.E.

PDF Generated at https://eu.odysseybattery.com 11/16/2026 07:31:17

Technical Data Sheet

ODP-AGM27

Line Drawing

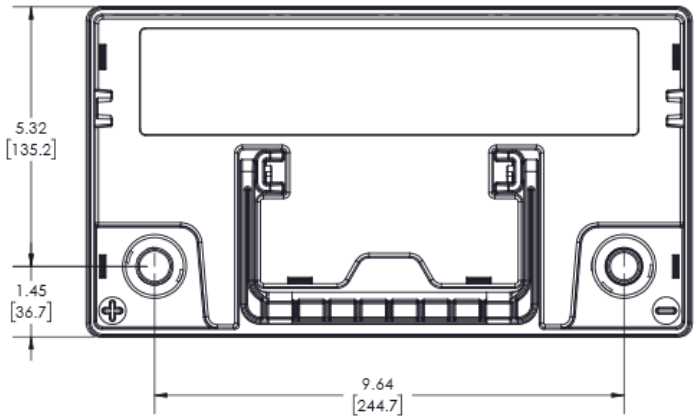

ODP-AGM27
LEFT POSITIVE
SAE TERMINALS

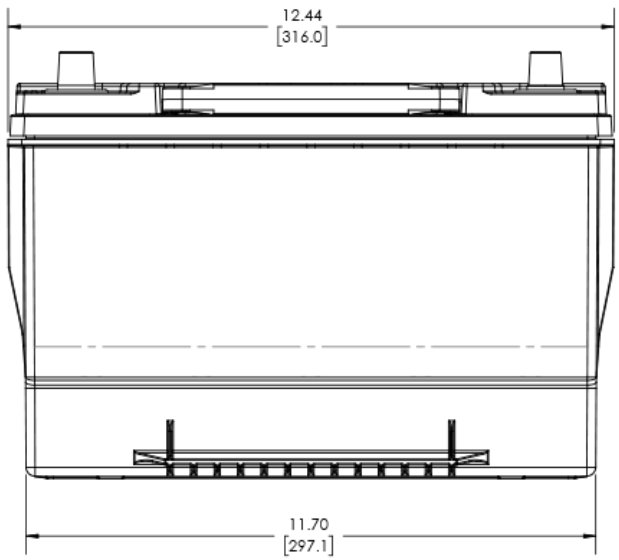

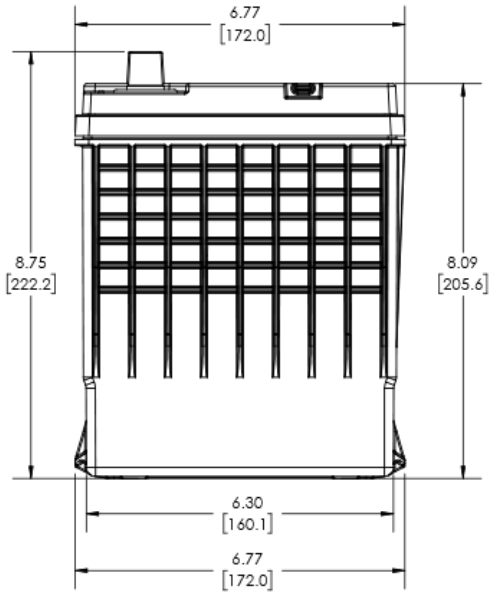

ODYSSEY batteries – AGM² Thin Plate Pure Lead (TPPL) Technology

ODYSSEY® AGM² Thin Plate Pure Lead (TPPL) batteries feature 99% pure lead plates that are extremely thin, so more of them fit into the battery. More plates mean more power – ODYSSEY AGM² TPPL batteries deliver twice the power and three times the service life of any other conventional battery, outperforming standard AGM or SLI (flooded) batteries in terms of power density, fast-charge acceptance, shelf life, durability and most important – value for your money.

Technical Data Sheet correct at time of exporting PDF. Please check website for updates.

EnerSys World Headquarters
2366 Bernville Road
Reading, PA 19605, USA
Tel: +1-800-964-2837

EnerSys EMEA
EH Europe GmbH
Baarerstrasse 18
6300 Zug, Switzerland

EnerSys APAC
No. 85, Tuas Avenue 1
Singapore 639518
Tel: +65 6558 7333

Want more info?
Scan code to access the ODYSSEY® Battery Literature Library

© 2026 EnerSys. All rights reserved. Trademarks and logos are the property of EnerSys and its affiliates unless otherwise noted. Subject to revisions without prior notice. E.&O.E.